FOTON

AUMAN

AUMAN

560 AIR SUSPENSION AXLE 6X4 AMT TRACTOR

	AUMAN 560 AIR SUSPENSION
Drive Style	6X4
Steering Wheel Position	Right Hand
MASS	
Manufacturer's Gross Vehicle Mass (GVM)	33,500 kg
Manufacturer's Gross Combination Mass (GCM)	56,000 kg
Manufacturer's Front Axle Mass (GA Front)	7,500 kg
Manufacturer's Rear Axle Mass (GAU Rear)	26,000 kg
Permissible Gross Vehicle Mass (V)	25,500 kg
Permissible Gross Combination Mass (D/T)	56,000 kg
Permissible Front Axle Mass (A Front)	7,500 kg
Permissible Rear Axle Mass (A Rear)	18,000 kg
Unladen Front Axle Mass (T Front)	4,872 kg
Unladen Rear Axle Mass (T Rear)	4,293 kg
Unladen Mass Total (Tare)	9,165 kg
DIMENSIONS	
Overall Length (OL)	7,115 mm
Overall Width (OW)	2,490 mm
Overall Height (OH)	3,950 mm
Front Overhang (FOH)	1,460 mm
Rear Overhang (ROH)	1,005 mm
Wheelbase (WB)	3,300 mm + 1,350 mm
Cab to Rear Axle (CA)	4,760 mm
Minimum Turning Radius (TR)	7,700 mm
Minimum Turning Diameter (TD)	15,400 mm
Ground Clearance	290 mm
Track - Front	2,080 mm
Track - Rear	1,865 mm
Chassis Outer Width	850 mm
Chassis Inner Width	690 mm
CHASSIS	
Type	Straight Ladder Type — Riveted
Front Suspension	Parabolic Leaf Springs with Double Acting Shock Absorbers
Rear Suspension	ZF-Air Suspension-8 Airbags
FUEL TANK	
Number	2
Total Capacity	Right: 760 Litre; Left: 300 Litre
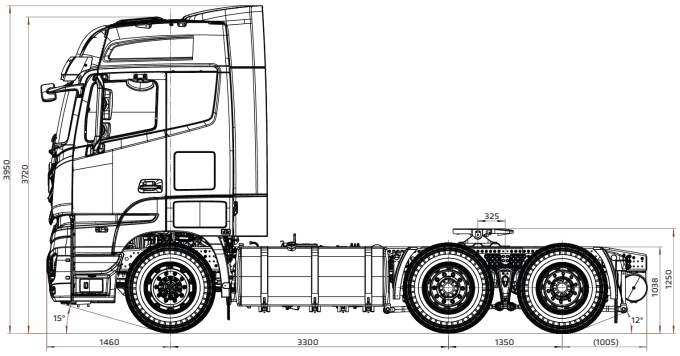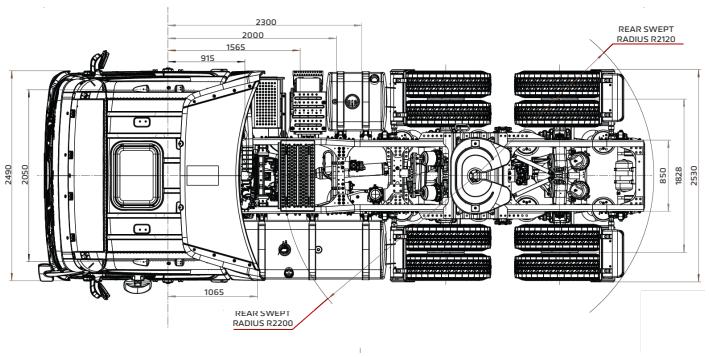
PERFORMANCE	
Permissible Road Speed	80 km/h
Gradeability at V	30%
ENGINE	
Make	CUMMINS
Model	X13E3-560
Max Power- Kw@R/Min	412/560/1800
Max Torque-N.M @ R/Min	2600/1000-1400
Cylinder	6
Type	Water Cooled, 4-Stroke, DI, Intercooling
Capacity	12,900 cm^3
TRANSMISSION	
Make	ZF TraXon
Model	12TX2621TD
Type	12 Speed AMT
Forward Ratios	i1-16.688, i2-12.924, i3-9.926, i4-7.688, i5-5.895, i6-4.565, i7-3.655, i8-2.831, i9-2.174, i10-1.684, i11-1.291, i12-1
Reverse Ratio	R1-15.537、R2-12.033
CLUTCH	
Diameter	430 mm
Type	Single Plate
Operation	Dry Type Diaphragm Spring
AXLE	
Front Axle	1-Beam section (Forged Steel)
Rear Axle	Full Floating- Single Reduction
Rear Axle Ratio	3.083
BRAKES	
System Type	Disc Brakes on Front Axle and Drum on Rear Axle
Auxiliary	Engine Brake + ZF Intarder
ABS + ESC	Yes
CAB	
Cab Control	Forward Tilt Cab
No. of Seats	2
ELECTRICAL SYSTEM	
System Voltage	24V Negative Earth
No. of Batteries	2 x 12V-180Ah
TYRE	
Tyre Size	315/80R22.5 20PR
Type	Radial